DANSANI®

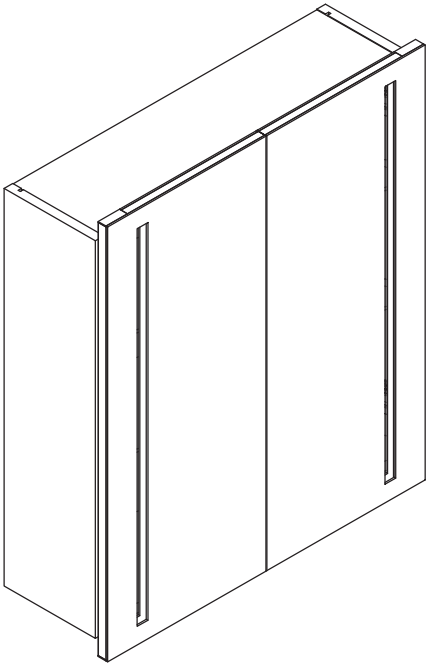

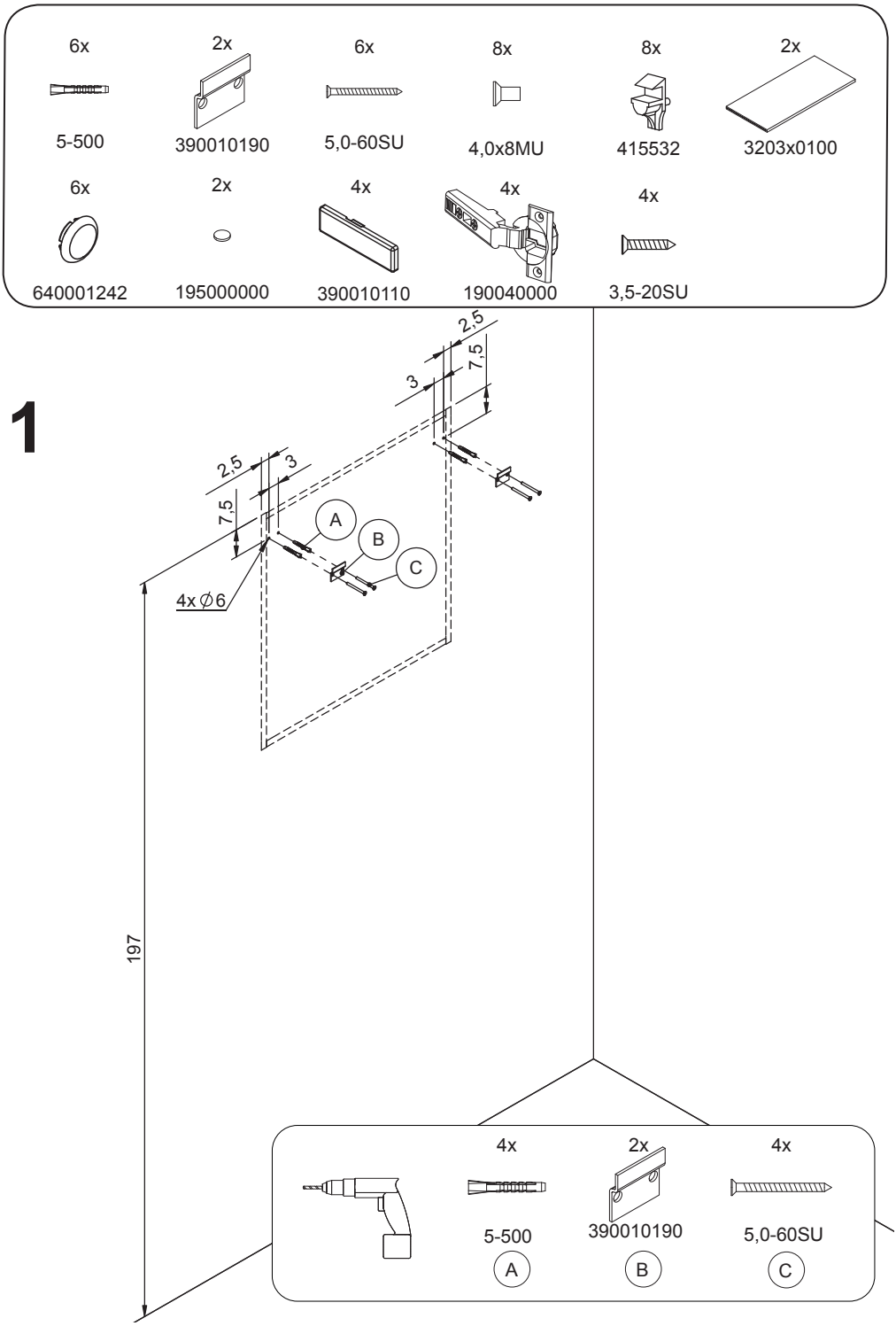
6x
5-500
2x
390010190
6x
5,0-60SU
8x
4,0x8MU
8x
415532
2x
3203x0100
6x
640001242
2x
195000000
4x
390010110
4x
190040000
4x
3,5-20SU
1
2,5
7,5
3
2,5
3
7,5
A
B
C
4x ∅6
197
4x
5-500
A
2x
390010190
B
4x
5,0-60SU
C

2

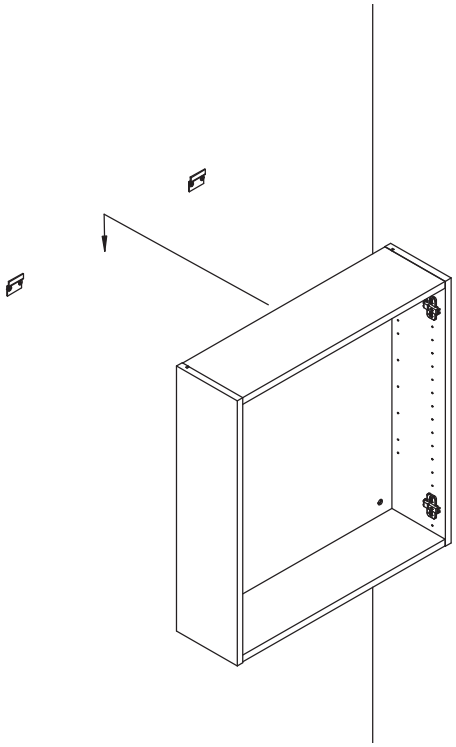

3

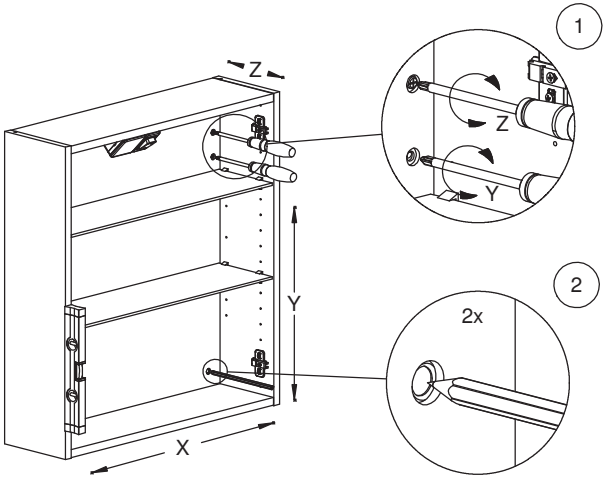

4

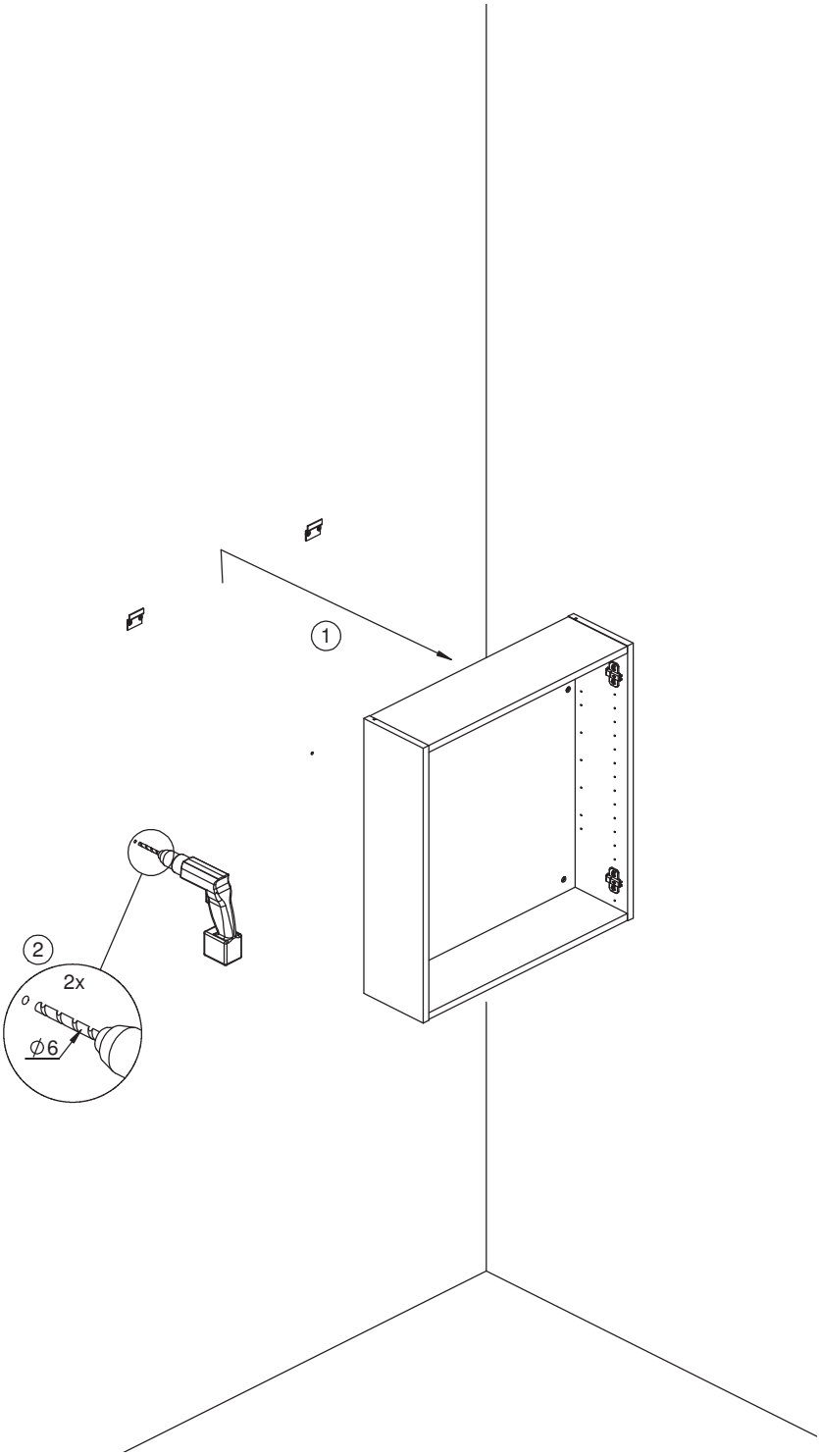

5

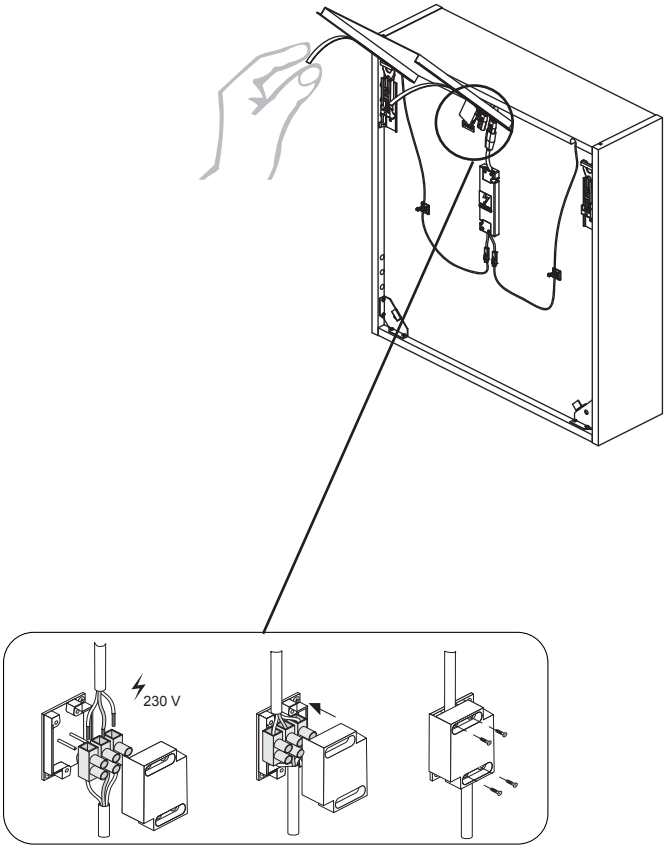

6

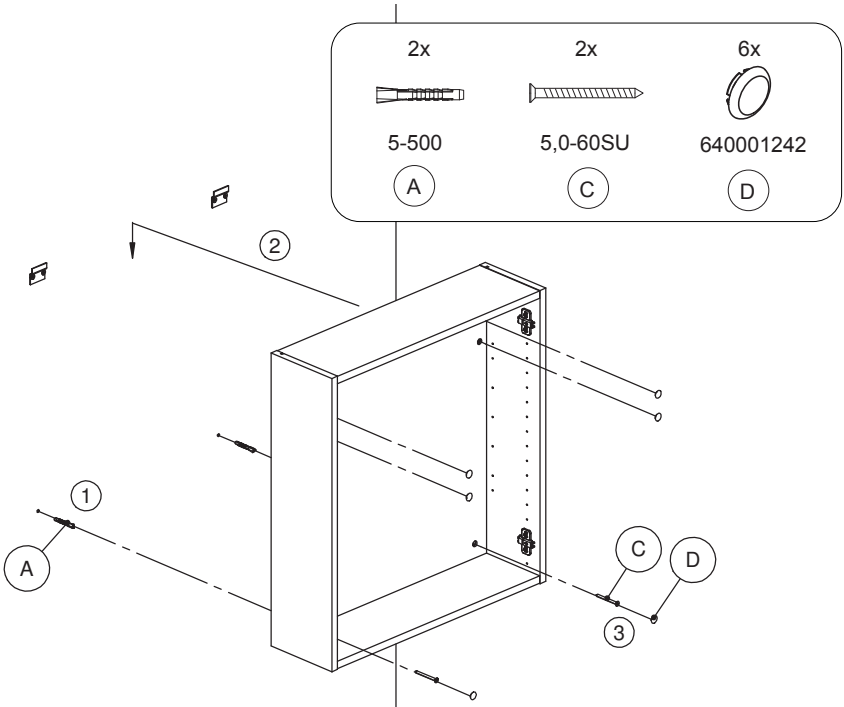
2x
5-500
A
2x
5,0-60SU
C
6x
640001242
D
2
1
A
C
D
3

7

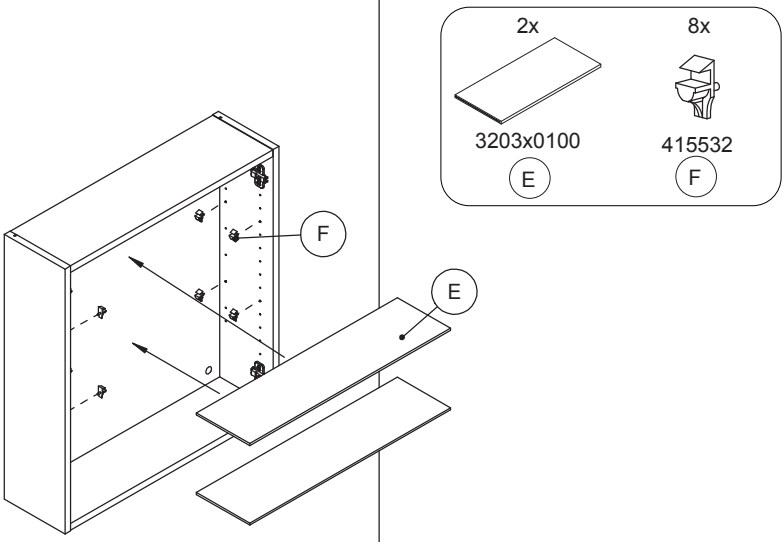
2x
3203x0100
E
8x
415532
F
F
E

8

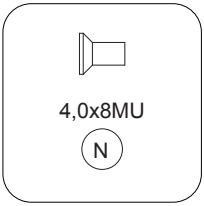

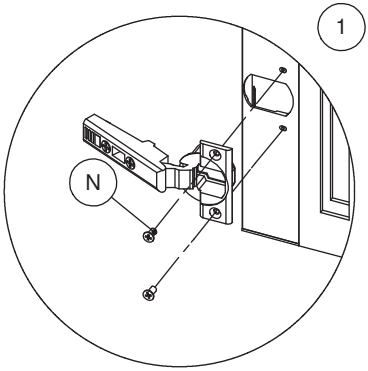

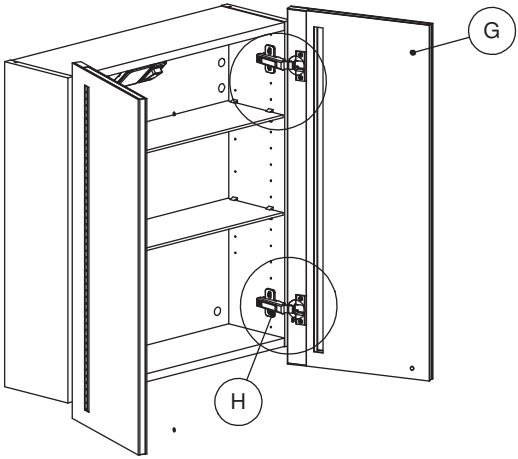

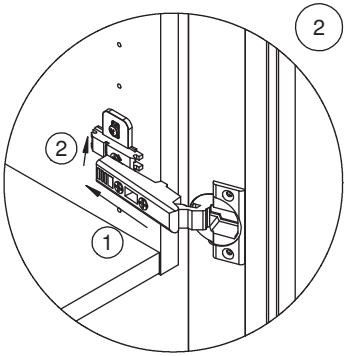

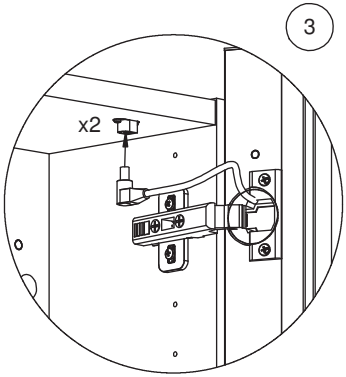

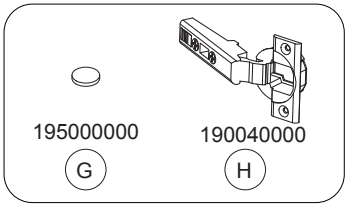

9

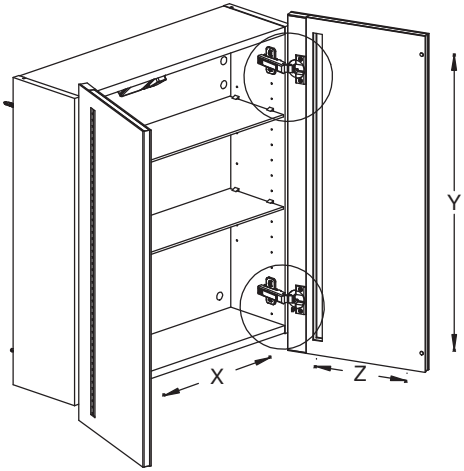

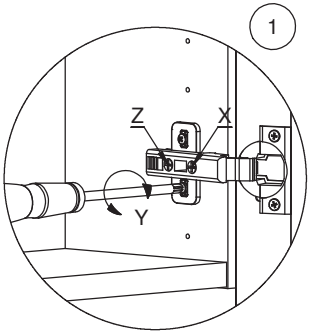

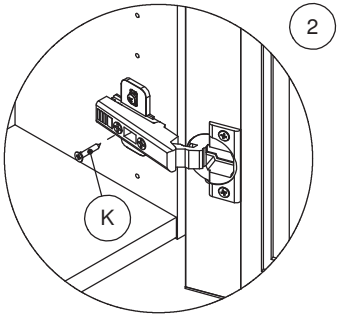

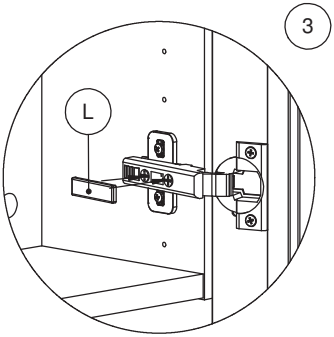

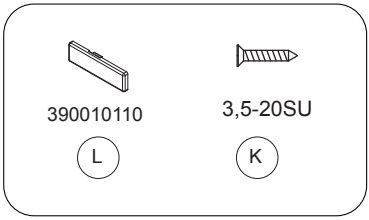

5 711112 006624